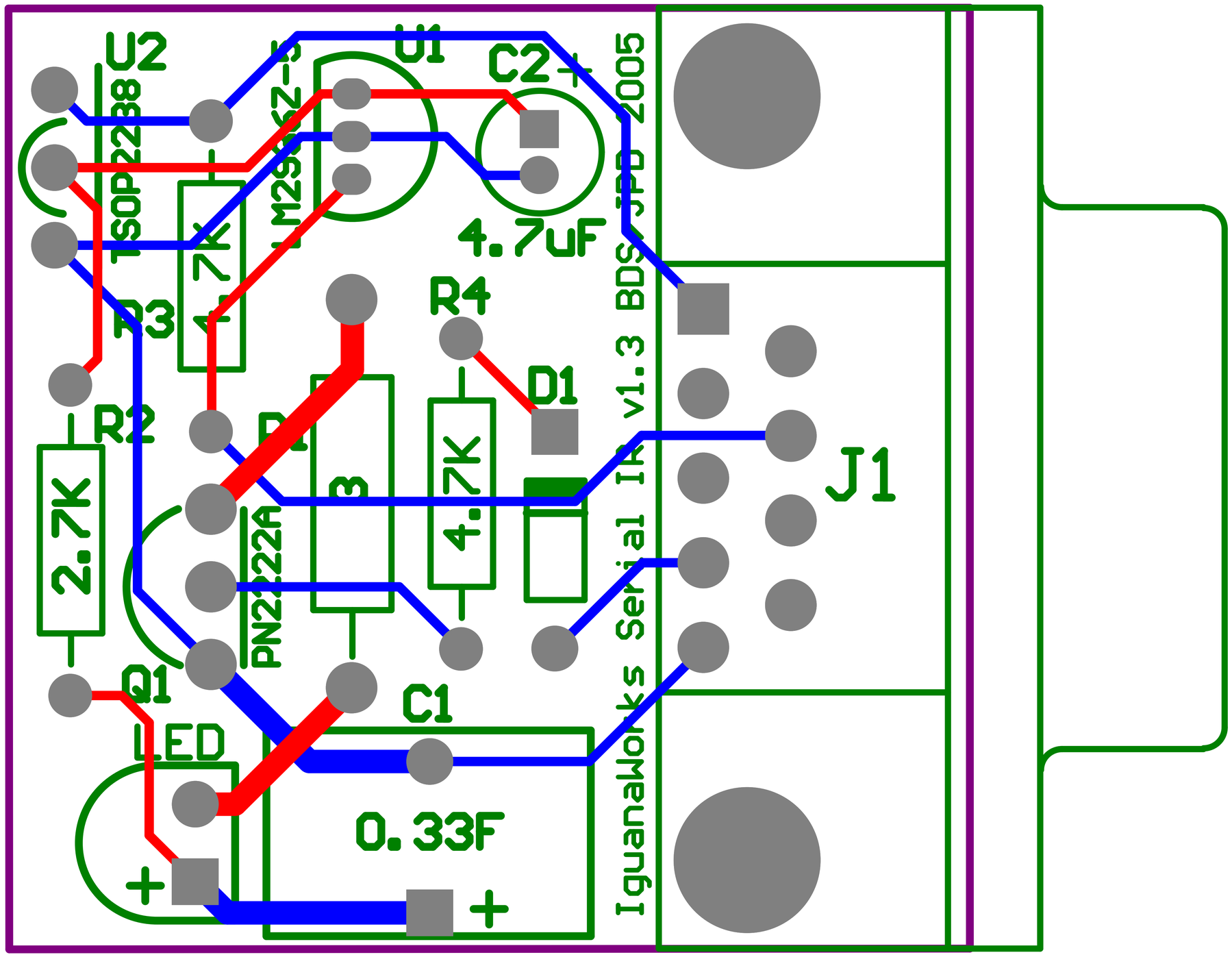
U2
TSOP2238
U1
LM2936Z-5
C2
4.7uF
R3
4.7K
R4
D1
R2
2.7K
R1
3
4.7K
PN2222A
J1
Q1
LED
C1
0.33F
IguanaWorks Serial IR v1.3 BDS JPD 2005